Sample Layouts

Layout 1

evolvefurnituregroup.com

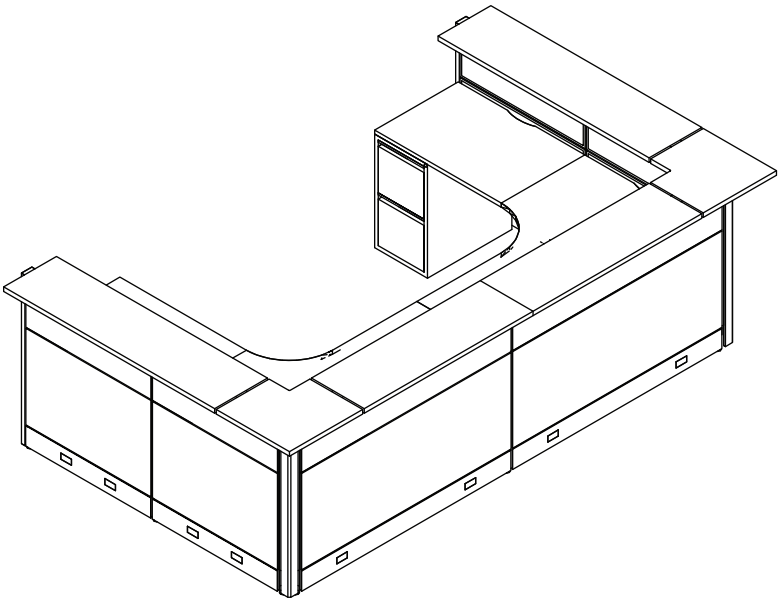

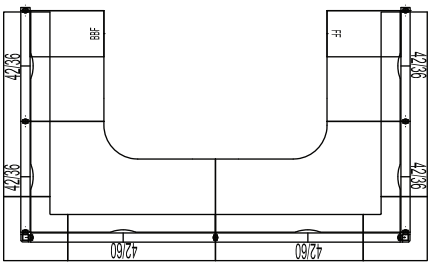

QTY	MODEL NUMBER	DESCRIPTION	LIST PRICE	EXTENDED
1	EVHC24L	Cantilever 24" Single - Left	77	77
2	EVHC24R	Cantilever 24" Single - Right	77	154
1	EVHCB2	Corner Brackets -Left and Right (pair)	17	17
8	EVHFB1	Flat Bracket	10	80
2	EVHPB1	Pedestal Bracket	19	38
10	EVHTB2	Transition Bracket	17	170
2	EVPCP242	2-Way Post 42", includes post connecting hardware and trim	129	258
2	EVPER42	End-of-Run Post Kit, includes post with leveling glide, clamp and and trim	62	124
4	EVPH1S4236	Laminate Panel - 42"H x 36"W	497	1,988
2	EVPH1S4260	Laminate Panel - 42"H x 60"W	747	1,494
3	EVPIC42	Connector 42", includes post with leveling glide and double clamp	51	153
1	EVSBBF24LP	Box, Box, File Pedestal, freestanding on worksurfaces supporting 24"D	447	447
1	EVSFF24LP	File, File Pedestal, freestanding on worksurfaces supporting 24"D	447	447
1	EVWCEL362460	Extended Curved Corner - 24"W x 36" x 60" - Left	470	470
1	EVWCER362460	Extended Curved Corner - 24"W x 36" x 60" - Right	470	470
2	EVWS2436	Worksurface with 3mm PVC edge trim 1 1/8" thick - 24" x 36"	113	226
2	EVWT1548	Transaction Top with 3mm PVC edge trim 1 1/8" - 15" x 48"	114	228
2	EVWT1560	Transaction Top with 3mm PVC edge trim 1 1/8" - 15" x 60"	138	276
2	EVWTCL90	Transaction Top 90º Corner - 21" x 21"	122	244